COOK

FCP-66

DATE: _____

PROJECT: _____

LOCATION: _____

Fiberglass Centrifugal Blower
Clockwise Bottom Horizontal
Arrangement 10, Class II

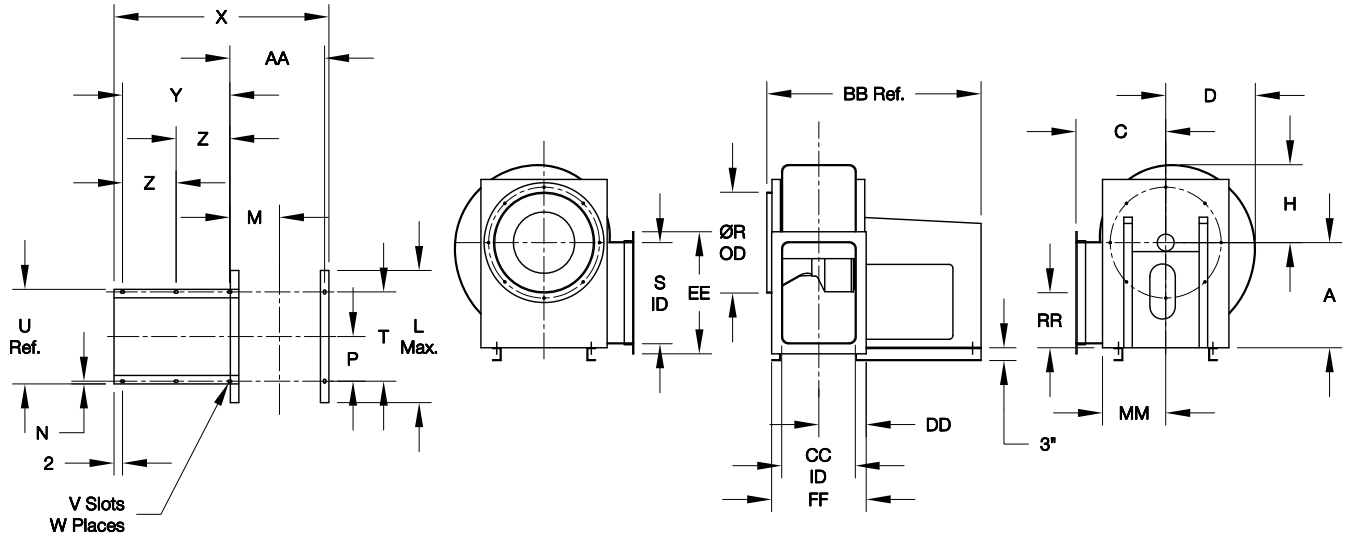

STANDARD CONSTRUCTION FEATURES:

Solid corrosion resistant fiberglass wheel model from vinylester resin – The housing and other standard components are of corrosion resistant fiberglass from polyester resin with a Class I flame spread rate of 25 or less – No metal parts in the airstream – Motor, drives, and bearings are easily accessible – Heavy duty ball or roller bearings with extended lube lines – Shaft with fiberglass sleeve in airstream and sized to operate well below critical speed – Neoprene shaft seal – Airstream hardware 304 Stainless steel and encapsulated – Outlet flange – Weather cover.

ACCESSORIES

1. OUTLET FLANGE HOLE PATTERN
2. FLANGED INLET
3. FLANGED INLET HOLE PATTERN
4. SPARK RESISTANT CONSTRUCTION
5. DRAIN
6. ACCESS DOOR
7. INSPECTION DOOR
8. DISCONNECT SWITCH
9. BELT GUARD
10. SHAFT GUARD
11. INLET VANE DAMPER
12. OUTLET DAMPER
13. ELECTROSTATIC GROUNDING
14. INLET GUARD
15. DISCHARGE GUARD

DIMENSION DATA

Size	A	C	D	H	L	M	N	P	R	S	T	U	V
120	17	13	11–5/8	10–1/16	20–3/4	7–5/8	5/8	9–3/4	12–1/4	12–7/8	19–1/2	20–3/4	9/16X1
150	17	16–3/16	14–3/4	12–7/8	20–3/4	8–7/16	5/8	9–3/4	16–3/8	16–1/8	19–1/2	20–3/4	9/16X1
180	20	19	17–11/16	15–7/16	24–3/4	8–1/2	5/8	10–1/2	19–3/8	19–3/8	21	22–1/4	9/16X1
225	24–3/4	21–1/8	21–1/2	18–3/4	29–3/4	9–7/8	5/8	11–1/8	23–3/8	23–11/16	22–1/4	23–1/2	9/16X1
245	27	23	23–5/16	20–5/16	31–1/8	10–1/2	5/8	10–1/2	25–3/4	25–3/4	21	22–1/4	9/16X1
270	28–1/2	24	26–3/8	23–1/4	34–3/8	11–3/16	13/16	13–3/16	28–5/8	29	26–3/8	28	11/16X1–1/2
300	30–1/2	28–1/2	28–9/16	25–3/16	37–5/8	12–5/8	13/16	13–7/8	31–1/16	31–1/2	27–3/4	29–3/8	11/16X1–1/2
330	37	28–11/16	31–3/8	27–5/8	41–5/8	13–5/8	13/16	13–7/8	34–1/16	34–11/16	27–3/4	29–3/8	11/16X1–1/2
365	37	31–1/4	33–13/16	29–3/8	44–1/8	14–5/8	13/16	13–7/8	37–1/16	37–13/16	27–3/4	29–3/8	11/16X1–1/2

Size	W	X	Y	Z	AA	BB	CC	DD	EE	FF	RR	Approx. Unit Wt.
120	6	36	19–5/8	–	13–3/8	37	8–11/16	7–13/16	18–1/8	13–1/2	10–9/16	188
150	6	37–5/8	19–5/8	–	15	38–5/8	10–5/16	8–1/2	21–1/16	15–1/4	8–15/16	215
180	6	44–3/8	25–1/4	–	16–1/8	45–3/8	12–5/16	9–11/16	24–1/2	17–3/8	10–3/8	309
225	6	47–1/8	25–1/4	–	18–7/8	48–1/8	15–1/16	11–1/16	28–3/4	20–3/16	12–15/16	397
245	6	48–1/2	25–1/4	–	20–1/4	49–1/2	16–3/8	11–3/4	30–13/16	21–1/2	14–1/8	554
270	8	55–7/16	29–5/8	14–13/16	22–13/16	56–1/2	18–1/2	13–1/16	36	25–1/2	14	728
300	8	60–7/16	33	16–1/2	24–7/16	61–1/2	20–1/8	13–7/8	38–1/2	27–1/8	14–3/4	878
330	8	62–1/2	33	16–1/2	26–1/2	63–9/16	22–1/8	14–15/16	41–5/8	29–1/8	19–11/16	1013
365	8	64–1/2	33	16–1/2	28–1/2	65–9/16	24–1/8	15–15/16	44–13/16	31–1/8	18–1/8	1131

ALL DIMENSIONS IN INCHES. WEIGHTS IN LBS., LESS MOTOR.