COOK

SRSH-D

DATE: _____

PROJECT: _____

LOCATION: _____

Tamper Proof Downblast
Centrifugal Exhaust Ventilator
Roof Mounted/Direct Drive

DIMENSION DATA

Size	A	B	C	D	T Sq.	Ship Wt.	Roof Opening Sq.*
60	23–7/16	1	29–1/4	2	18–1/4	100	13–1/2
65	23–7/16	1	29–1/4	2	18–1/4	100	13–1/2
70	23–7/16	1	29–1/4	2	18–1/4	100	13–1/2
75	23–7/16	1	29–1/4	2	18–1/4	100	13–1/2
80	23–7/16	1	29–1/4	2	18–1/4	100	13–1/2
85	23–7/16	1	29–1/4	2	18–1/4	100	13–1/2
100	23–7/16	1	29–1/4	2	18–1/4	100	13–1/2
120	24–11/16	1	32–11/16	2	20–1/4	117	15–1/2
135	25–5/8	1	33–3/4	2	20–1/4	121	15–1/2
150	29–9/16	1	38–13/16	2	24–1/4	156	19–1/2
165	30–1/2	1	39–15/16	2	24–1/4	162	19–1/2
180	36–7/16	1–1/2	47–9/16	3	30–1/4	226	25–1/2

ALL DIMENSIONS IN INCHES. WEIGHTS IN LBS.
* ROOF OPENING SIZE FOR CURBS SUPPLIED BY COOK ONLY.

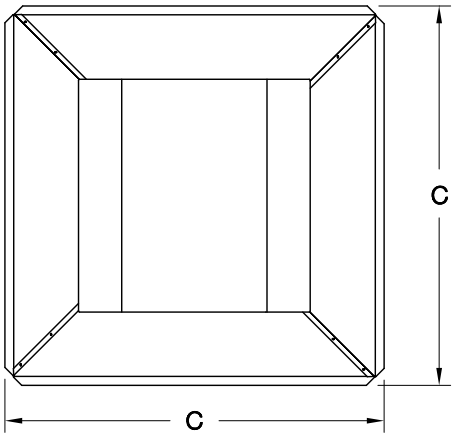

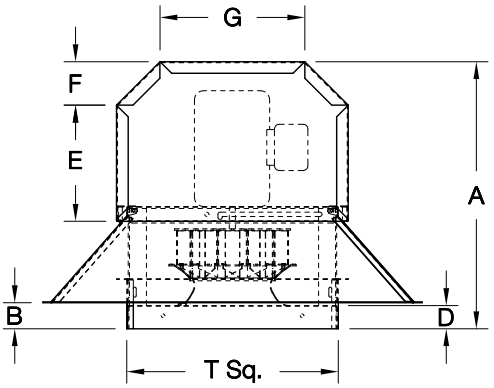

STANDARD CONSTRUCTION FEATURES:

All galvanized housing – Backward inclined all aluminum wheel – Hinged galvanized access hood with restraining bar – Birdscreen – Vibration isolators – Permanently lubricated ball bearing motors – Tamper proof corrosion resistant external fasteners – Stainless steel locking hasp for padlock under outer skirt.

ACCESSORIES

1. DISCONNECT SWITCH, MOUNTED & WIRED
2. FAN SPEED CONTROL
3. GRAVITY BACKDRAFT DAMPER
4. MOTORIZED BACKDRAFT DAMPER
5. RCG GALVANIZED CURB
6. RCA ALUMINUM CURB

QTY	MARK	CATALOG NUMBER	FAN INFORMATION			MOTOR INFORMATION					ACCESSORIES			
			CFM	SP	RPM	HP	VOLTS	HZ	PH	TYPE				

MOTOR TYPE: **ODP** (OPEN DRIP–PROOF); **PSC** (PERMANENT SPLIT CAPACITOR)

TP002R01