CPV-EC

DATE: _____

PROJECT: _____

LOCATION: _____

Centrifugal Blower
Counterclockwise
Top Angular Up
Arrangement 4

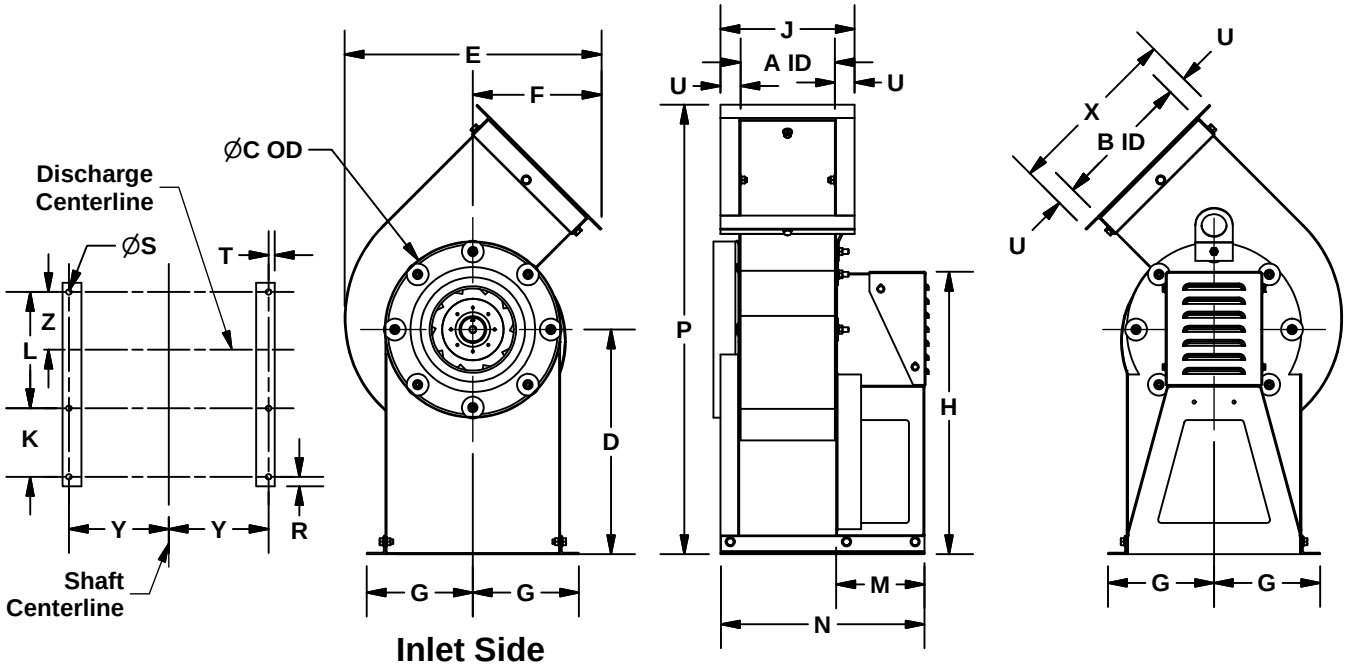

Dimension Data

Size	A	B	C	D	E	F	G	H*	J	K	L
60	7 9/16	10 15/16	14 1/8	18	20 3/8	10 1/8	8 1/2	22 1/2	10 3/4	5 1/2	9 5/16
70	7 9/16	10 15/16	14 1/8	18	20 3/8	10 1/8	8 1/2	22 1/2	10 3/4	5 1/2	9 5/16
80	7 9/16	10 15/16	14 1/8	18	20 3/8	10 1/8	8 1/2	22 1/2	10 3/4	5 1/2	9 5/16
100	7 9/16	10 15/16	14 1/8	18	20 3/8	10 1/8	8 1/2	22 1/2	10 3/4	5 1/2	9 5/16
120	9 3/16	13 1/8	16 1/8	18	22 15/16	10 5/8	9 1/2	23	12 3/8	8	10 15/16
135	10 5/16	14 3/4	17 5/8	18	24 13/16	11	10 1/4	23 1/2	13 1/2	8 1/2	12 1/16
150	11 7/16	16 7/16	19 1/8	19 1/16	27 3/8	12	11	24 1/2	14 5/8	8 1/2	13 3/16

Size	M	N	P*	R	S	T	U*	X	Y	Z	Unit Wt
60	7 1/16	16 5/16	35 13/16	3/4	7/16	1/2	1 1/2	14 1/16	8	4 5/8	65
70	7 1/16	16 5/16	35 13/16	3/4	7/16	1/2	1 1/2	14 1/16	8	4 5/8	65
80	7 1/16	16 5/16	35 13/16	3/4	7/16	1/2	1 1/2	14 1/16	8	4 5/8	65
100	7 1/16	16 5/16	35 13/16	3/4	7/16	1/2	1 1/2	14 1/16	8	4 5/8	65
120	9 9/16	20 7/16	37 13/16	3/4	7/16	1/2	1 1/2	16 5/16	9	5 7/16	77
135	10 1/16	22 1/16	39 5/16	3/4	7/16	1/2	1 1/2	17 15/16	9 3/4	6	95
150	10 3/32	23 3/16	42 9/16	3/4	7/16	1/2	1 1/2	19 5/8	10 1/2	6 1/2	110

ALL DIMENSIONS IN INCHES. WEIGHTS IN LBS., LESS MOTOR. * REFERENCE DIMENSION.