MAC

Mobile Air Cleaner Fans

INSTALLATION, OPERATION AND MAINTENANCE MANUAL

This publication contains the installation, operation and maintenance instructions for standard units of the *MAC: Mobile Air Cleaner Fans.*

Carefully read this publication and any supplemental documents prior to any installation or maintenance procedure.

Loren Cook Flyer, *MAC,* provides additional information describing the equipment, fan performance, available accessories and specification data.

All of the publications listed above can be obtained from:

- lorencook.com
- *info@lorencook.com*
- 417-869-6474 ext. 166

For information and instructions on special equipment, contact Loren Cook Company at 417-869-6474.

Receiving

Inspection

Immediately, upon receipt of an MAC fan, carefully inspect the fan and accessories for damage and shortage.

- Inspect housing for damage.
- Record on the Delivery Receipt any visible sign of damage.

Handling

The fan shipping crate is designed to be lifted and moved with a fork truck or pallet jack. After the fan is removed from the shipping crate, the fan can be rolled along any hard, flat surface. Handles are provided to aid in the rolling of unit. **Do not lift by the handles!** When not being moved or anytime the fan is plugged in, the brakes on the casters should be set.

MAC

⚠ WARNING

Rotating Parts & Electrical Shock Hazard:

Fans should be installed and serviced by qualified personnel only.

Disconnect electric power before working on unit (prior to removal of guards or entry into access doors).

Cord must be connected to properly grounded receptacle.

Fans and blowers create pressure at the discharge and vacuum at the inlet. This may cause objects to get pulled into the unit and objects to be propelled rapidly from the discharge. The discharge should always be directed in a safe direction and inlets should not be left unguarded. Any object pulled into the inlet will become a projectile capable of causing serious injury or death.

Friction and power loss inside rotating components will cause them to be a potential burn hazard. All components should be approached with caution and/or allowed to cool before contacting them for maintenance.

Under certain lighting conditions, rotating components may appear stationary. Components should be verified to be stationary in a safe manner, before they come into contact with personnel, tools or clothing.

The fan is intended for horizontal operation only. Use and store only with the castors supporting the unit on the floor. Only operate when sitting on a flat level surface with the wheel brakes applied.

For indoor use only. Not intended for material handling, or industrial use.

Do not use or store near combustible or explosive material.

Do not expose to water or rain.

De-energize and disconnect power for cleaning and servicing.

Do not operate if cord or plug is damaged. Contact an authorized service facility for examination and/or repair.

Do not run cord under carpeting. Do not cover cord with throw rugs, runners or similar coverings. Arrange cord away from traffic areas and where it is not a tripping hazard.

Do not move while fan is operating. Always de-energize and unplug prior to moving.

Do not use in conjunction with an electrical extension cord.

Failure to follow these instructions could result in death or serious injury.

Storage

If the fan is stored for any length of time, it needs to be stored properly. The cord should be properly stored on the holder and not allowed to drag on the ground. The fan should always be stored indoors in a clean environment with low humidity. A dirty environment with high humidity can significantly reduce the lifespan of the filter, even when not operating.

Setup and Operation

Proper setup is essential to the safety and efficiency of the fan. When choosing a location be sure that there is a minimum of two feet of unobstructed space on the inlet and outlet ends of the fan. Also, be sure there are no loose items surrounding the fan (curtains, cords, etc.). The electrical and control panel should be readily accessible and not blocked by any surrounding items. It is recommended that a minimum of two wheels be locked.

Air Flow Requirements

To determine the optimal operating speed for the fan, the volume of the room and required number of air changes per hour needs to be considered. The volume of the room is calculated by measuring the length, width and height in feet and multiplying those three numbers together. The number of air changes per hour can vary greatly depending on factors such as the rooms intended use, number of occupants and if there are additional sources of fresh clean air. Suggestions range from 2 to 6 air changes per hour. The formula below can help you determine how much air flow is required.

L (ft) x W (ft) x H (ft) x N / 60 = CFM
L = Length of Room
W = Width of Room
H = Height of Room
N = Number of Air Changes per Hour
CFM = Cubic Feet per Minute

Once your desired CFM has been calculated, reference the chart below for the necessary motor RPM. The motor RPM can be set by following the instructions in the Changing Fan Speed section of this manual.

CFM	RPM
582	534
600	551
800	734
1000	918
1200	1102
1400	1285
1600	1469
1800	1652
1935	1776

Electrical Connection

Electrical connection is made to a grounded (NEMA 5-15) receptacle. Care should be taken to not overload the circuit. The switch will illuminate when connected to an energized NEMA 5-15 receptacle.

Cord connection and removal should be done when the switch is in the off position to prevent arcing and surges. Disconnecting the unit from the wall should be done by firmly grasping the plug. Never pull on the cord as this can damage the connections inside the plug.

The unit should be unplugged from the wall receptacle when it will not be used for an extended period of time.

Fig 1

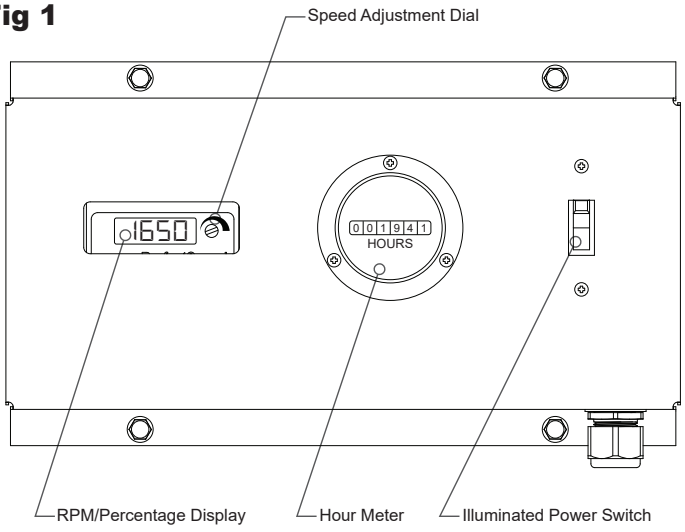

Operation

To operate the fan, first completely unwrap the power cord from the holder. Extend the cord and properly route it to the nearest wall outlet. Before plugging the cord into the wall be sure the power switch is in the down position. Plug the power cord into the wall. To turn on the fan move the power switch into the up position. The power switch should now be illuminated. If the power switch is not illuminated unplug the power cord and contact a service professional. Allow a few seconds for the motor to turn on and begin rotating. The fan can now be adjusted to the desired RPM that was calculated in the Air Flow Requirements section. Speed adjustment instructions are located in the section below.

Transportation

To move the fan first unplug the unit from the wall outlet. Unfold the cord holders located on the side of the unit. Wrap the cord around the holders and secure so that the cord will not be dragging on the ground. Once the cord is secure unlock the wheels. Each wheel comes equipped with a brake so it will be necessary to check all four. The unit can now be moved using the two handles, located on the top, as a means of steering the unit.

Changing Fan Speed

Speed adjustment requires the use of a small flat blade screwdriver. The fan speed will be displayed as RPM and as a percentage. Rotate the blue speed adjustment dial (see Figure 1) with the screwdriver clockwise to increase the speed and counterclockwise to reduce the speed until the desired speed is achieved.

Maintenance

Filter changes

Pre-Filter – Remove the (4) plastic knobs securing the inlet guard to the unit. Remove the inlet guard from the unit. Remove the pre-filter by sliding it up. Install the new pre-filter making sure that it is fully resting in the bottom channel. Inspect the foam gasket for any damage and replace if necessary. Align the inlet guard on the four threaded studs and loosely install the plastic knobs. Tighten knobs until the foam gasket is sealed tightly against the unit to minimize air leaks.

HEPA Filter- Remove inlet guard and pre-filter according to the instructions above. Loosen the (4) wing nuts holding the HEPA retention plates. Remove the upper and lower retention

plates and set aside. Slide the HEPA filter out of the unit and dispose of properly. Inspect the new HEPA filter for damage to the media or casing before installing. Install the HEPA filter according to the air flow labels on the filter. Insert the bottom of the filter first making sure that it is resting on the two rails in the bottom of the unit. Once the bottom is started tilt the top of the filter in the unit and slide until it is fully inserted. Do not press on the media of the filter when installing. Install the lower retention plate with the leg facing out. Install the upper retention plate with the leg facing in and above the HEPA filter. Gradually tighten the (4) three wing nuts using a diagonal pattern until equal pressure has been applied at all four corners and the filter gasket has been compressed against the inner panel. Installation of the pre-filter and inlet guard is the same as in the instructions for pre-filter changes.

Recommended Maintenance Schedule

The following Schedule is advisable under normal operating conditions, for severe applications the filter may need replaced more frequently.

Filter	Replace After
Merv 8 Filter	2,500 Hours
HEPA Filter (99.97% Eff)	10,000 Hours

Parts List

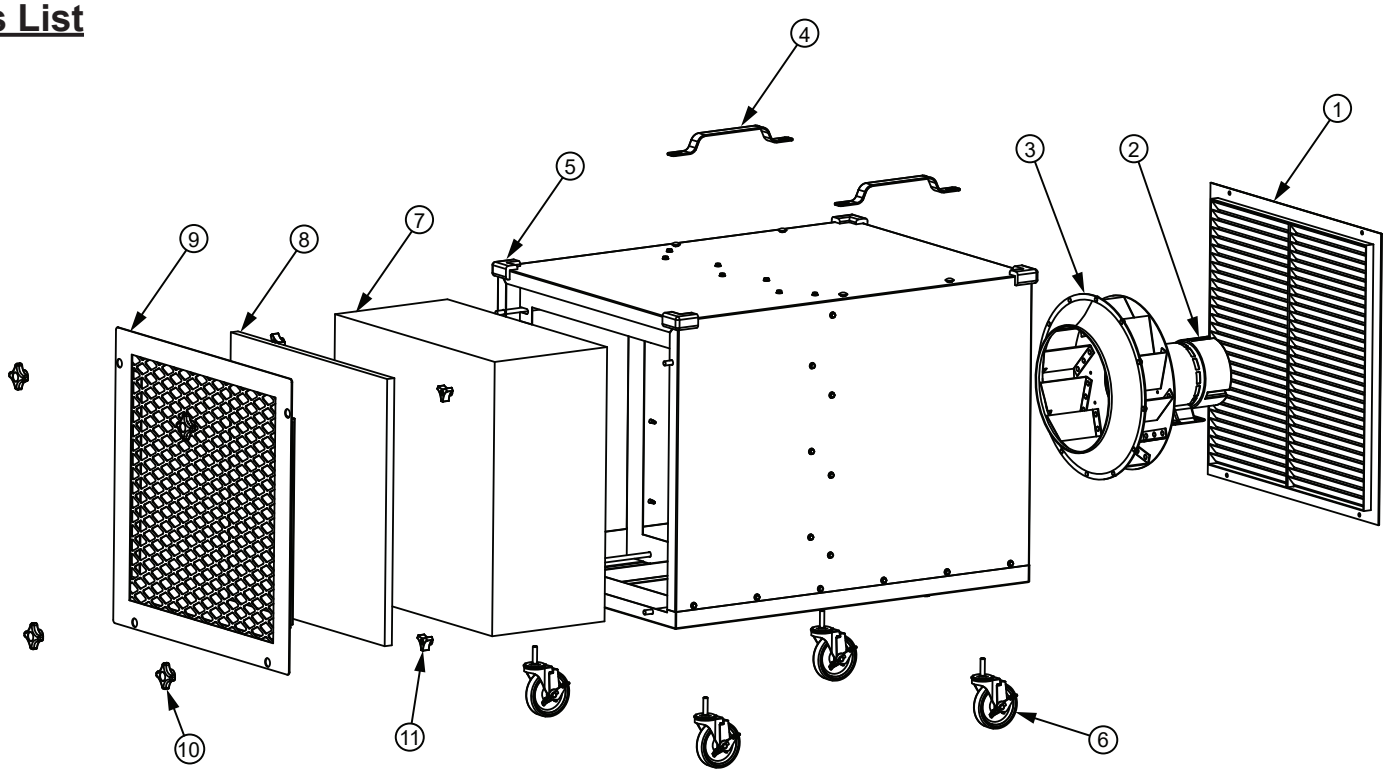

Part No	Description
1	Outlet Grille
2	Motor
3	Fan Wheel
4	Handles
5	Bumpers
6	Casters
7	HEPA Filter
8	Pre-Filter
9	Inlet Grille
10	Grille Knobs
11	Filter Knobs

Limited Warranty

Loren Cook Company warrants that your Loren Cook fan was manufactured free of defects in materials and workmanship, to the extent stated herein. For a period of one (1) year after date of shipment, we will replace any parts found to be defective without charge, except for shipping costs which will be paid by you. This warranty is granted only to the original purchaser placing the fan in service. This warranty is void if the fan or any part thereof has been altered or modified from its original design or has been abused, misused, damaged or is in worn condition or if the fan has been used other than for the uses described in the company manual. This warranty does not cover defects resulting from normal wear and tear. To make a warranty claim, notify Loren Cook Company, General Offices, 2015 East Dale Street, Springfield, Missouri 65803-4637, explaining in writing, in detail, your complaint and referring to the specific model and serial numbers of your fan. Upon receipt by Loren Cook Company of your written complaint, you will be notified, within thirty (30) days of our receipt of your complaint, in writing, as to the manner in which your claim will be handled. If you are entitled to warranty relief, a warranty adjustment will be completed within sixty (60) business days of the receipt of your written complaint by Loren Cook Company. This warranty gives only the original purchaser placing the fan in service specifically the right. You may have other legal rights which vary from state to state. For fans provided with motors, the motor manufacturer warrants motors for a designated period stated in the manufacturer's warranty. Warranty periods vary from manufacturer to manufacturer. Should motors furnished by Loren Cook Company prove defective during the designated period, they should be returned to the nearest authorized motor ser-vice station. Loren Cook Company will not be responsible for any removal or installation costs.

LOREN COOK COMPANY

Corporate Offices: 2015 E. Dale St. Springfield, MO 65803

Phone 417-869-6474 | Fax 417-862-3820 | lorencook.com

November 2020