VARI-FLOW® CONTROLLER

Temperature Controller

Air Balance Kit

Wiring Supplement

This publication contains supplemental wiring instructions for the Vari-Flow® Air Balance Kit and the Temperature Controller. Carefully read this publication prior to any installation or maintenance procedure.

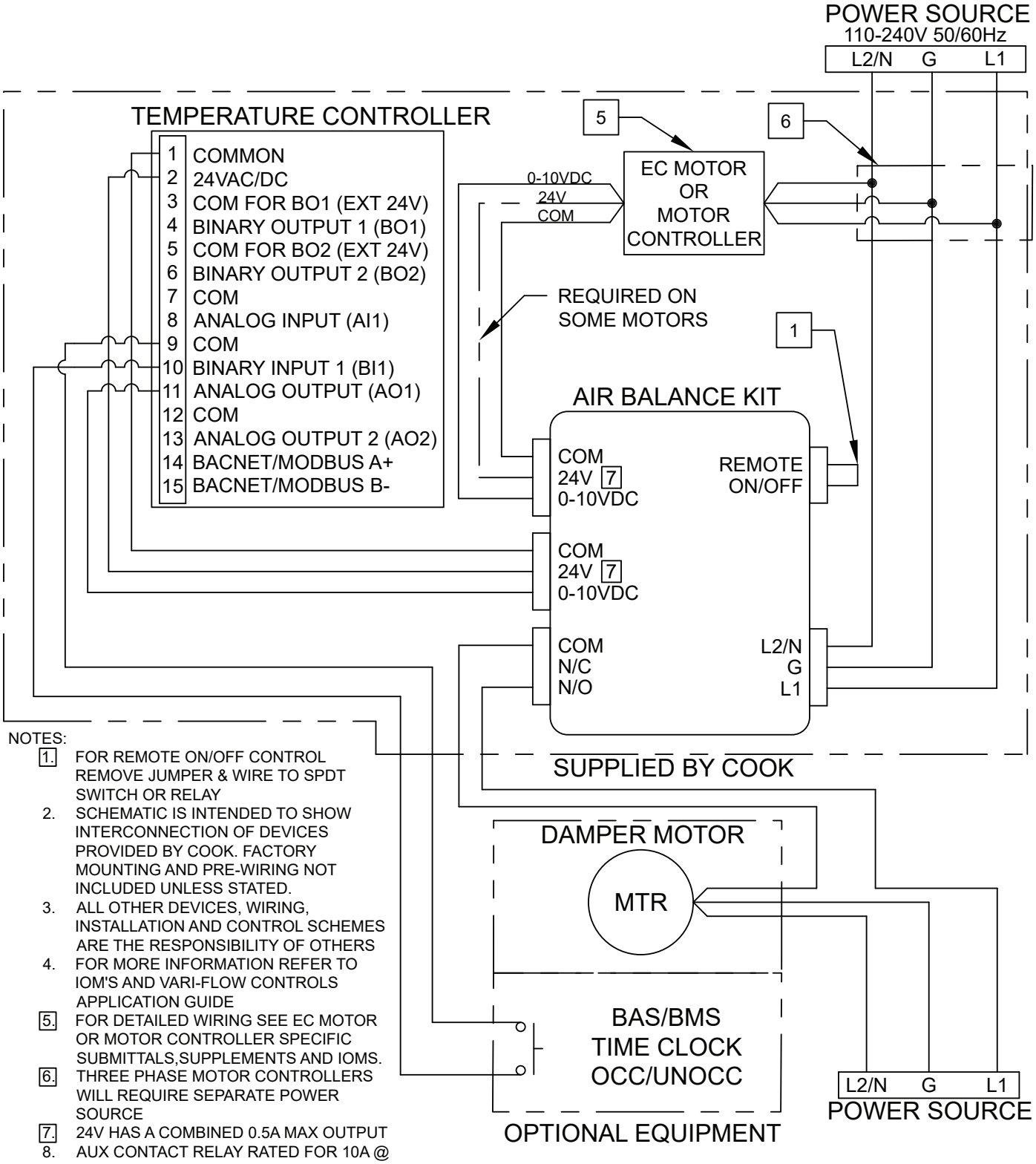

NOTES:

1. FOR REMOTE ON/OFF CONTROL REMOVE JUMPER & WIRE TO SPDT SWITCH OR RELAY
2. SCHEMATIC IS INTENDED TO SHOW INTERCONNECTION OF DEVICES PROVIDED BY COOK. FACTORY MOUNTING AND PRE-WIRING NOT INCLUDED UNLESS STATED.
3. ALL OTHER DEVICES, WIRING, INSTALLATION AND CONTROL SCHEMES ARE THE RESPONSIBILITY OF OTHERS
4. FOR MORE INFORMATION REFER TO IOM'S AND VARI-FLOW CONTROLS APPLICATION GUIDE
5. FOR DETAILED WIRING SEE EC MOTOR OR MOTOR CONTROLLER SPECIFIC SUBMITTALS,SUPPLEMENTS AND IOMS.
6. THREE PHASE MOTOR CONTROLLERS WILL REQUIRE SEPARATE POWER SOURCE
7. 24V HAS A COMBINED 0.5A MAX OUTPUT
8. AUX CONTACT RELAY RATED FOR 10A @ 24-250VAC, 10A @ 30VDC